TECHNICAL BRIEF

IQ EV Charger 2 installation configurations

Applicable regions: Europe

© 2026 Enphase Energy. All rights reserved. Enphase, the e and CC logos, IQ, and certain other marks listed at https://enphase.com/trademark-usage-guidelines are trademarks of Enphase Energy, Inc. in the U.S. and other countries. Data subject to change.

Contents

1 About this document 3
2 IQ EV Charger 2 3
2.1 IQ EV Charger 2 SKUs 4
3 Supported system configurations 4
4 Site requirements 5
4.1 Safety and electrical requirements 5
4.2 Commissioning requirements 5
5 Configurations 6
5.1 Standalone configuration 6
5.2 Solar with IQ7/IQ8/String inverter and IQ Gateway Metered/IQ Combiner 3P EU 6
5.3 Solar with IQ7/IQ8/String inverter, IQ Gateway Metered/IQ Combiner 3P EU, and IQ Battery 7
5.4 Solar with IQ7/IQ8/String inverter, IQ Gateway, IQ Battery, and HEMS 8
6 IQ EV Charger 2 wiring configurations 9
7 Wiring and operations 10
7.1 Solar/Battery single-phase and IQ EV Charger 2 single-phase 10
7.2 Solar/Battery single-phase and IQ EV Charger 2 three-phase 11
7.3 Solar/Battery three-phase and IQ EV Charger 2 three-phase 11
7.4 Solar/Battery three-phase and IQ EV Charger 2 single-phase 12
7.5 Solar/Battery single or two-phase and IQ EV Charger 2 three-phase 13
8 Revision history 13

© 2026 Enphase Energy Inc. All rights reserved.

1. About this document

This technical brief provides installers with the information needed to install the Enphase IQ EV Charger 2 at new or retrofit residential sites.

2. IQ EV Charger 2

The IQ EV Charger 2 combines innovative software-defined hardware with AI-powered energy management. This smart charger is easy to install, supports all Type-2 compatible EVs, and remains future-proof with regular over-the-air updates. It integrates seamlessly with Enphase Energy Systems, enabling users to manage solar, battery, and EV charging—all from the Enphase App.



Figure 1: IQ EV Charger 2

© 2026 Enphase Energy Inc. All rights reserved.

2.1 IQ EV Charger 2 SKUs

Model	Type	SKU	Description
IQ EV Charger 2	Tethered 1P	IQ-EVSE-UK-1032-0105-1300[1]	Single-phase, integrated with the Enphase Energy System, 7.5 m Type-2 charging cable
	Tethered 3P	IQ-EVSE-EU-3032-0105-1300[2]	Three-phase, integrated with the Enphase Energy System, 7.5 m Type-2 charging cable
	Socketed 3P	IQ-EVSE-EU-3032-0005-1300[2]	Three-phase, integrated with the Enphase Energy System, Type-2 shuttered socket

3. Supported system configurations

Type	Microinverters	IQ Gateway or IQ Combiner	IQ Energy Router	Production & Consumption CT	IQ Battery
Standalone	NA	NA	No	NA	No
Solar Only IQ7 or IQ8	IQ7/IQ8	IQ Gateway Metered or IQ Combiner 3P EU	No	Yes	No
Solar Only string inverter	Sting inverter	IQ Gateway Metered or IQ Combiner 3P EU	Yes	Yes	No
Solar Only IQ7/8/ String inverter and dynamic tariff	IQ7/IQ8/ String inverter	IQ Gateway Metered or IQ Combiner 3P EU	No	Yes	No
Solar IQ7/8 & Battery	IQ7/IQ8	IQ Gateway Metered or IQ Combiner 3P EU	No	Yes	Yes
Solar string inverter and battery	Sting inverter	IQ Gateway Metered or IQ Combiner 3P EU	Yes	Yes	Yes
Solar IQ7/8, Battery, and dynamic tariff	IQ7/IQ8	IQ Gateway Metered or IQ Combiner 3P EU	No	Yes	Yes

[1] Available only in Great Britain.
[2] Not available in Great Britain.

© 2026 Enphase Energy Inc. All rights reserved.

Type	Microinverters	IQ Gateway or IQ Combiner	IQ Energy Router	Production & Consumption CT	IQ Battery
Third-party PV and battery	Third-party	IQ Gateway Metered or IQ Combiner 3P EU	No	Yes	Yes

NOTE: Self-Consumption and Savings modes are supported by upgrading to IQ Gateway Metered.

NOTE: Do not select Self-Consumption mode for single-phase sites with PEL ≤1.4 kW and three-phase sites with PEL ≤4.14 kW.

4. Site requirements

4.1 Safety and electrical requirements

The following are the essential safety and electrical site requirements:

- Ensure the electrical panel has a dedicated circuit with a circuit breaker and conductors adequate to support the EV charger load. Ensure the circuit breaker and Type A 30 mA RCD are installed according to the local regulations. The circuit breaker rating must correspond to the maximum current limit set on the IQ EV Charger 2.
- While installing the power supply to the IQ EV Charger, phase conductors must be installed according to the phase allocation of the IQ Gateway Metered. If phase rotation is used, it must be configured during commissioning.
- Follow the local installation standards and best practices and ensure the electrical work is performed by a competent electrician.
- Follow all safety and installation instructions according to the product documentation.

4.2 Commissioning requirements

The following are the essential site commissioning requirements:

- IQ EV Charger commissioning is available through either the Enphase App or the Enphase Installer App.
- IQ EV Charger integration at the Enphase Energy System sites must be performed by Enphase-certified installers.
- When installing an IQ EV Charger with Solar Only/Solar Plus Battery at a new site, use the Enphase Installer App for site creation. After the site is commissioned, the IQ EV Charger can be commissioned with the help of either the Installer App or Enphase App.
- For effective EV charging using excess solar production, the site must be installed with Production and Consumption CTs across all phases. For single-phase sites, the CTs shall be on L1 only, but for three-phase sites, CTs must be placed on *all three phases* even if the PV/Battery systems are installed only on one or two of the phases.
- IQ EV Charger 2 supports all earthing configurations of TN/TT/IT grids. Follow the relevant earthing guidelines according to the local regulations.

© 2026 Enphase Energy Inc. All rights reserved.

NOTE: The IQ EV Charger is not fully integrated into the IQ System Controller for off-grid scenarios. For such scenarios, it is recommended to connect the IQ EV Charger as a part of the non-backed-up load.

5. Configurations

5.1 Standalone configuration

In this configuration, the EV charger is connected to the electrical supply as shown in the following figure.

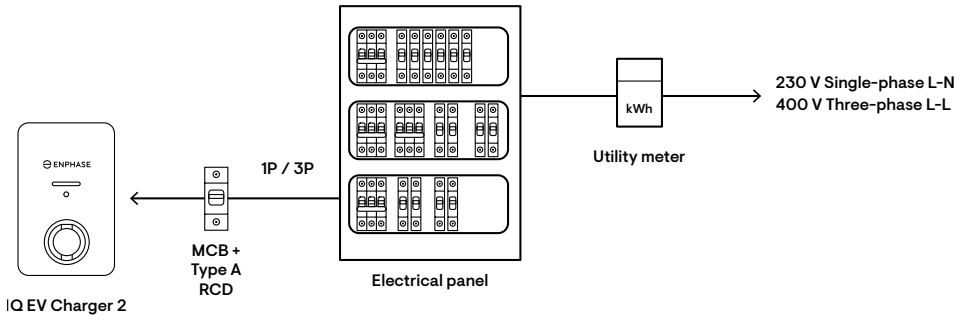

Figure 2: Standalone configuration

NOTE: The MCB/RCD may be located inside the electrical panel.

5.2 Solar with IQ7/IQ8/String inverter and IQ Gateway Metered/IQ Combiner 3P EU

IQ EV Charger 2 is connected to the electrical supply as shown in the following figure.

- IQ7/IQ8/String inverter with IQ Gateway Metered or IQ Combiner 3P EU is supported.
- Production and Consumption CTs must be installed.
- This site configuration can use schedule, Green charging, and off-peak charging.
- Dynamic tariff is currently available only in Belgium, Germany, and The Netherlands.

© 2026 Enphase Energy Inc. All rights reserved.

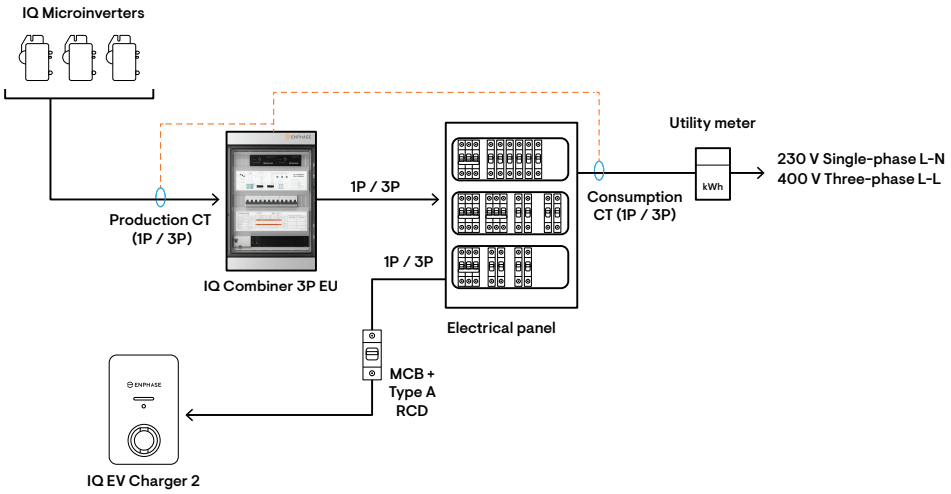

Figure 3: Solar Only with IQ7/IQ8/String inverter with IQ Gateway Metered/IQ Combiner 3P EU

NOTE: Production CTs are part of IQ Combiner 3P EU. In the preceding figure, they are shown externally because they are an important part of the installation. IQ Combiner 3P EU is shown as an example. However, the usage of individual components that make up the IQ Combiner is also supported.

NOTE: The MCB/RCD may be located inside the electrical panel.

5.3 Solar with IQ7/IQ8/String inverter, IQ Gateway Metered/IQ Combiner 3P EU, and IQ Battery

IQ EV Charger 2 is connected to the electrical supply as shown in the following figure.

- Sites with IQ7/IQ8/String inverter, IQ Combiner 3P EU or IQ Gateway Metered, and IQ Battery are supported.
- Production and Consumption CTs must be installed.
- This site can fully leverage excess solar and battery to charge the EV.
- Dynamic tariff is currently available only in Belgium, Germany, and The Netherlands.

© 2026 Enphase Energy Inc. All rights reserved.

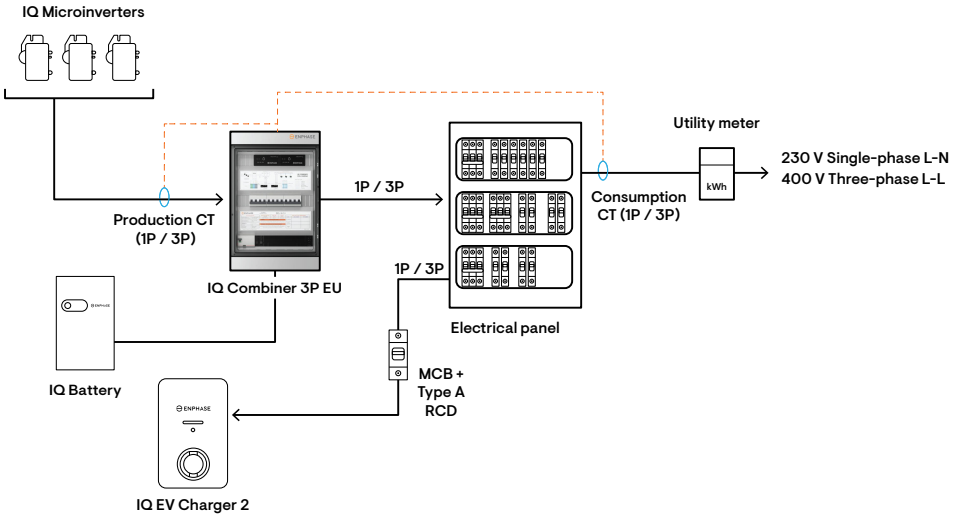

Figure 4: Solar with IQ7/IQ8/String inverter, IQ Gateway Metered/IQ Combiner 3P EU, and IQ Battery

NOTE: Production CTs are part of IQ Combiner 3P EU. In the preceding figure, they are shown externally because they are an important part of the installation. IQ Combiner 3P EU is shown as an example. However, the usage of individual components that make up the IQ Combiner is also supported.

NOTE: The MCB/RCD may be located inside the electrical panel.

5.4 Solar with IQ7/IQ8/String inverter, IQ Gateway, IQ Battery, and HEMS

IQ EV Charger 2 is connected to the electrical supply as shown in the following figure.

- Sites with IQ7/IQ8/String inverter, IQ Combiner 3P EU or IQ Gateway Metered, and IQ Battery are supported.
- Production and Consumption CTs must be installed.
- This site can fully leverage excess solar and battery to charge the EV.
- Third-party EV chargers and IQ EV Charger 2 can co-exist. Profiles can be activated on both third-party EV chargers and IQ EV Charger 2. If multiple IQ EV Chargers are present at one site, then only one of the EV chargers is enabled.
- Dynamic tariff is currently available only in Belgium, Germany, and The Netherlands.

© 2026 Enphase Energy Inc. All rights reserved.

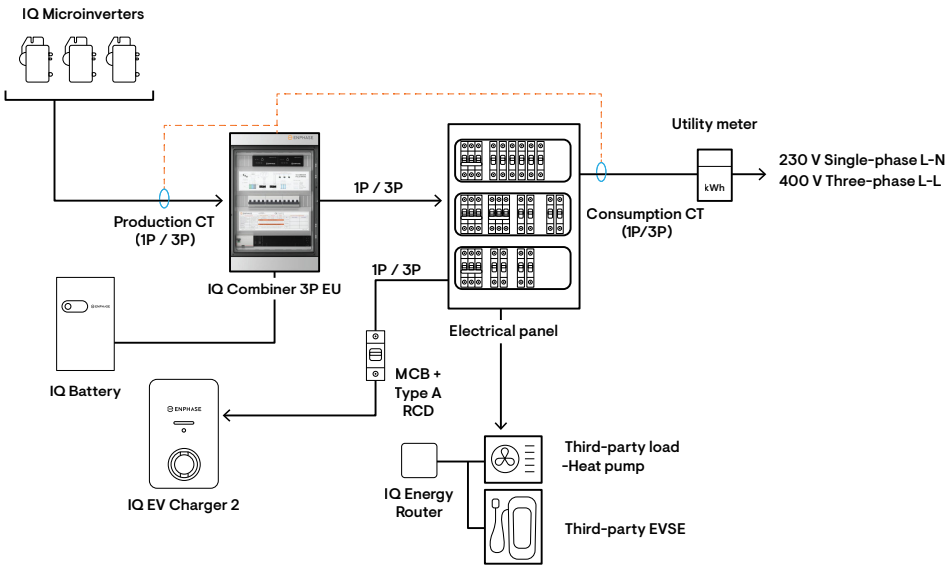

Figure 5: Solar with IQ7/IQ8/String inverter, IQ Gateway, IQ Battery, and HEMS

NOTE: Production CTs are part of IQ Combiner 3P EU. In the preceding figure, they are shown externally because they are an important part of the installation. IQ Combiner 3P EU is shown as an example. However, the usage of individual components that make up the IQ Combiner is also supported.

NOTE: The MCB/RCD may be located inside the electrical panel.

6. IQ EV Charger 2 wiring configurations

Site configuration		IQ EV Charger 2 single-phase	IQ EV Charger 2 three-phase
Standalone	–	Yes	Yes
Solar Only	single-phase	Yes[3]	Yes[3]
	three-phase	**Yes**	Yes[3]
Battery Only	single-phase	Yes	Yes
	three-phase	Yes	Yes
Solar Plus Battery	single-phase	Yes[3]	Yes[3]
	three-phase	Yes[3]	Yes[3]

The Green charging limits are decided based on the aggregate solar energy generated and exported. The IQ EV Charger 2 supports dynamic switching between three-phase and single-phase operations to optimize Green charging (Self-Consumption profile).

The minimum power for a three-phase charging is 4.2 kW (6A @3ph) while for a single-phase charging, it is 1.38 kW (6A@1Ph). The dynamic phase switching feature enables the IQ EV Charger 2 to switch between three-phase charging (>4.2 kW) and single-phase charging (<4.2 kW and >1.38

[3] Green charging is possible.

© 2026 Enphase Energy Inc. All rights reserved.

kW) based on the available excess solar energy produced. This maximizes the use of excess solar energy enabling the charging at as low as 1.38 kW.

7. Wiring and operations

7.1 Solar/Battery single-phase and IQ EV Charger 2 single-phase

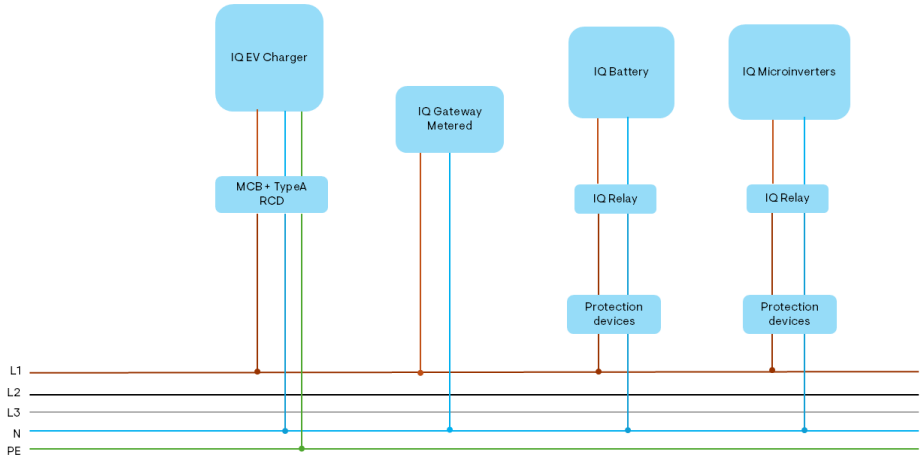

NOTE: The wiring shown is for a three-phase grid connection. For single-phase connections, the wiring must be adjusted accordingly.

To perform optimised Green charging, the IQ EV Charger 2 must be connected to the same phase as the solar/battery. This setup enables charging using the excess solar energy, controlled by the IQ Gateway Metered/IQ EV Charger Cloud, with reduced phase imbalance. Additionally, Savings Mode can be used to charge using the excess solar/battery energy.

NOTE: Ensure that consumption on all three phases is monitored by the IQ Gateway Metered to meet loss of phase (LOP) and phase imbalance (PIM) requirements where applicable.

© 2026 Enphase Energy Inc. All rights reserved.

7.2 Solar/Battery single-phase and IQ EV Charger 2 three-phase

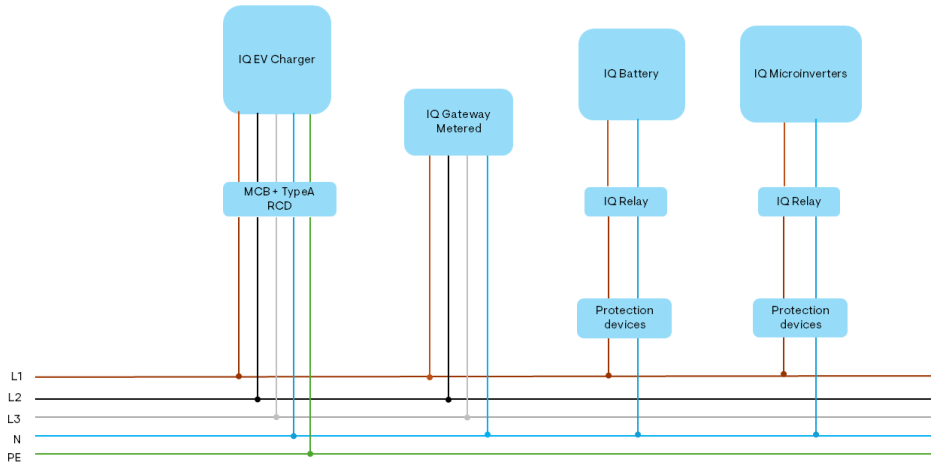

Green charging can be done using the aggregate excess solar energy. To perform optimised Green charging, the IQ EV Charger 2 must be connected to the same phase as the solar/battery. This setup enables charging using the excess solar energy, controlled by the IQ Gateway Metered/IQ EV Charger Cloud, with reduced phase imbalance. When using all three phases, you can operate in Savings Mode to use the excess solar/battery energy (only L1) for charging.

NOTE: Ensure that consumption on all three phases is monitored by the IQ Gateway Metered to meet loss of phase (LOP) and phase imbalance (PIM) requirements where applicable.

7.3 Solar/Battery three-phase and IQ EV Charger 2 three-phase

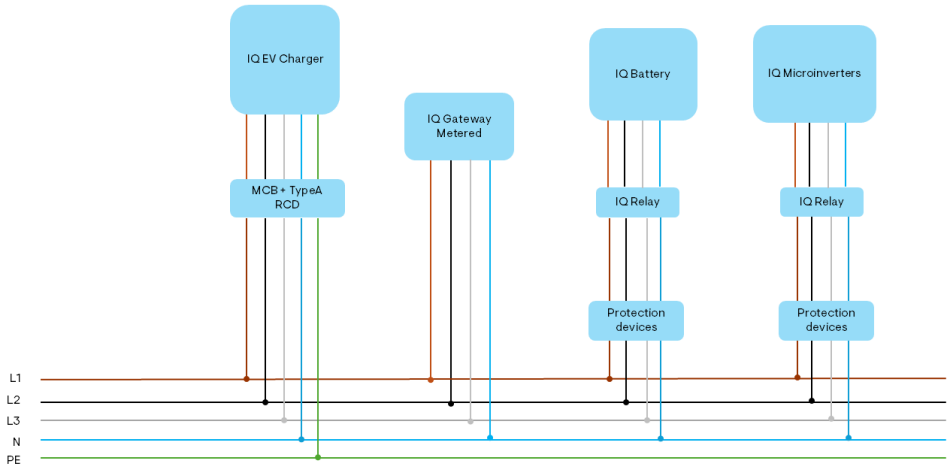

As both solar/battery and IQ EV Charger 2 are three-phase, Green charging can be performed using the excess solar energy on all three phases. Based on the available excess solar energy, the

© 2026 Enphase Energy Inc. All rights reserved.

IQ EV Charger automatically switches between single-phase and three-phase charging. Additionally, Savings Mode can be used to charge using the excess solar/battery energy.

NOTE: Ensure that consumption on all three phases is monitored by the IQ Gateway Metered to meet loss of phase (LOP) and phase imbalance (PIM) requirements where applicable.

7.4 Solar/Battery three-phase and IQ EV Charger 2 single-phase

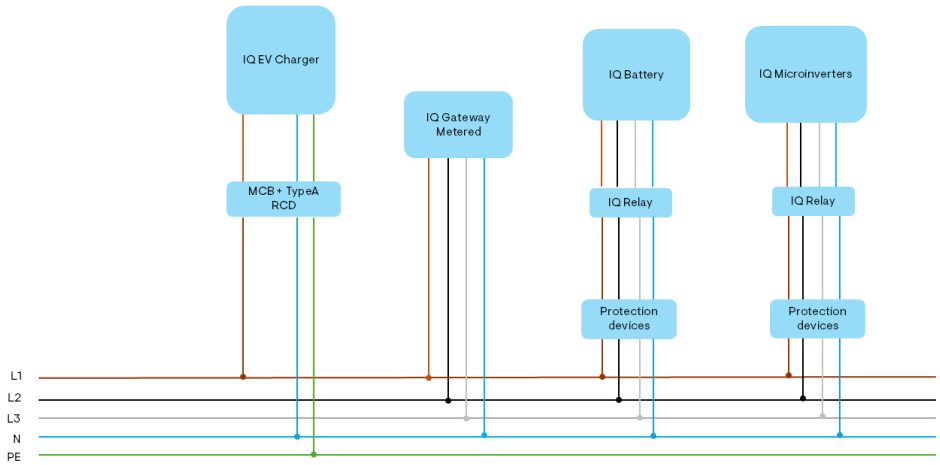

Green charging can be performed based on the aggregate excess solar energy. Additionally, Savings Mode can be used to charge using the excess solar/battery energy.

NOTE: Ensure that consumption on all three phases is monitored by the IQ Gateway Metered to meet loss of phase (LOP) and phase imbalance (PIM) requirements where applicable.

WARNING: This is not a preferred mode because such an installation can cause phase imbalance issues.

© 2026 Enphase Energy Inc. All rights reserved.

7.5 Solar/Battery single or two-phase and IQ EV Charger 2 three-phase

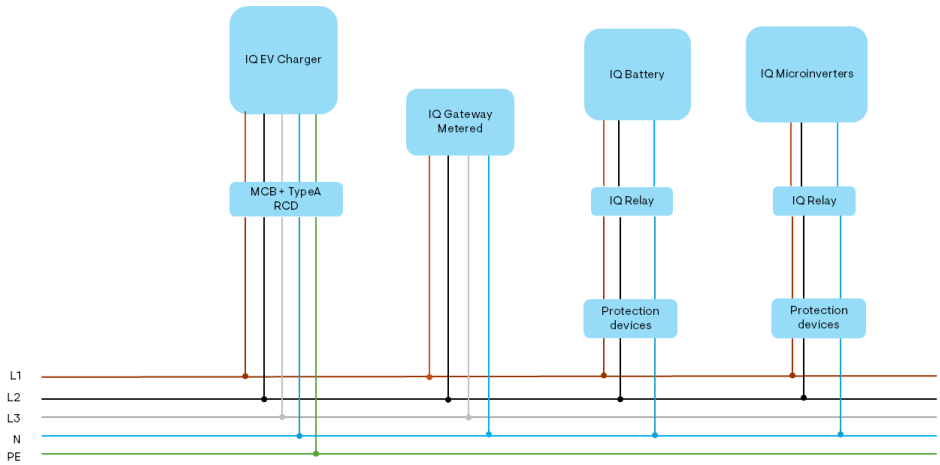

As both solar/battery and IQ EV Charger 2 are not three-phase systems, Green charging can be performed using the aggregate excess solar energy. Additionally, Savings Mode can be used to charge on all phases using the excess solar/battery energy.

NOTE: Ensure that consumption on all three phases is monitored by the IQ Gateway Metered to meet loss of phase (LOP) and phase imbalance (PIM) requirements where applicable.

8. Revision history

Revision	Date	Description
TEB-00204-3.0	February 2026	Editorial updates.
TEB-00204-2.0	October 2025	
TEB-00204-1.0	December 2024	Initial release.

© 2026 Enphase Energy Inc. All rights reserved.